MARTINS INDUSTRIES

MARTINSINDUSTRIES.COM

MTD-72

WEIGHT	**52 kg / 114 lb**
TIRES CAPACITY	**UP TO 16**
LOAD CAPACITY	**227 kg / 500 lb**
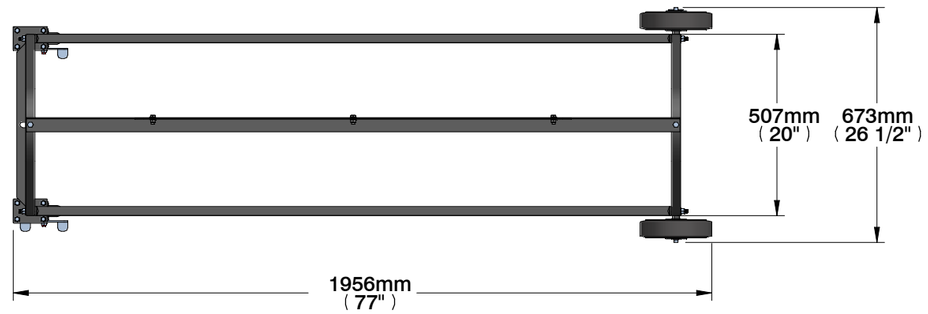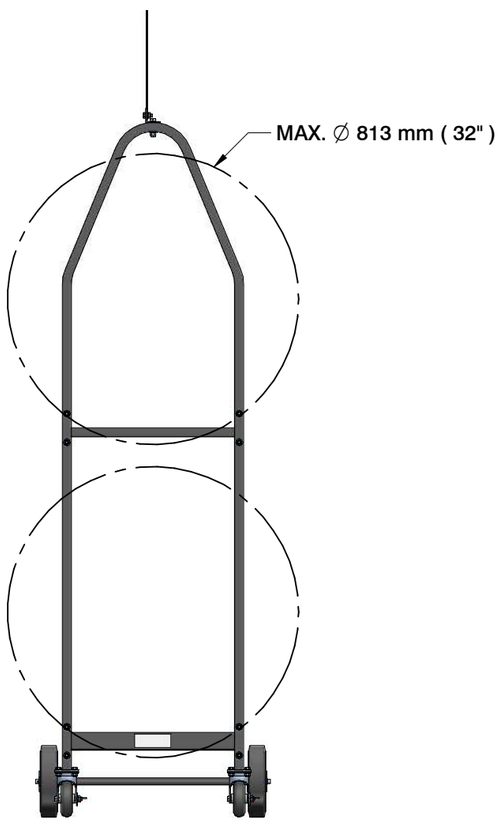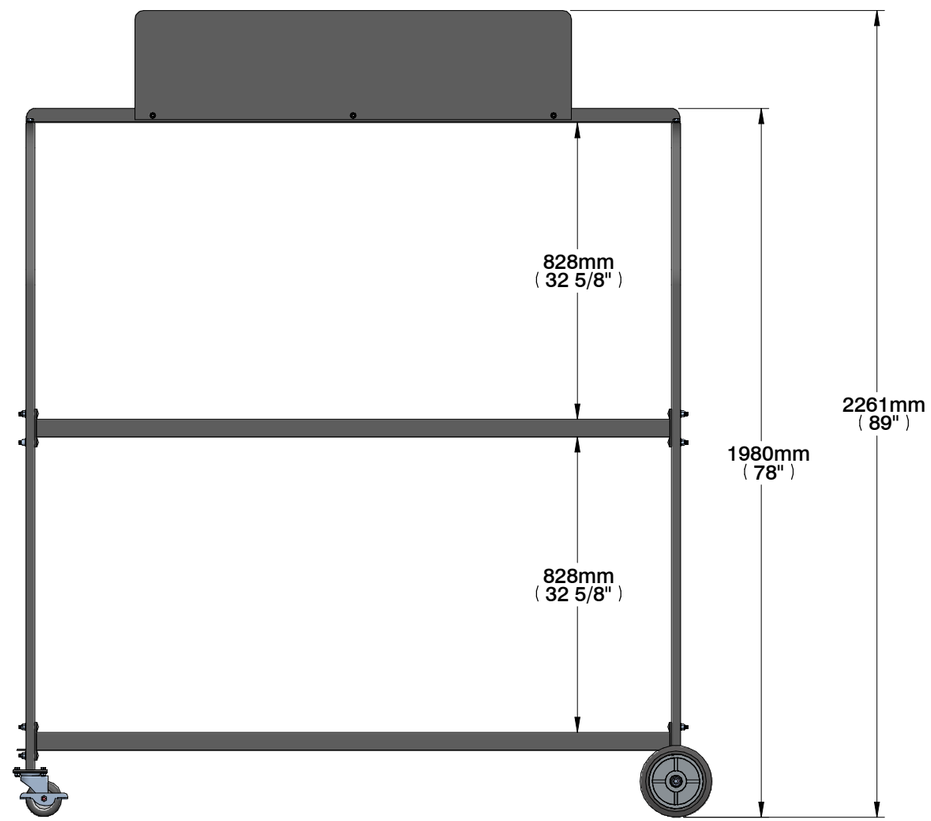
THIS DRAWING AND THE INFORMATION CONTAINED IN THIS DOCUMENT IS THE PROPERTY OF **INDUSTRIES MARTINS INC.** AND SHALL NOT BE REPRODUCED, COPIED, MODIFIED, OR USED WITHOUT THE WRITTEN PERMISSION OF **INDUSTRIES MARTINS INC.**