Top Five Benefits

1. Balances the weight of assembly tools, making them nearly weightless
2. Reduces operator fatigue
3. Improves safety and ergonomics
4. Increases productivity by keeping tools positioned for immediate use with minimal operator motion
5. Reduces tool damage by preventing tools from being accidentally dropped

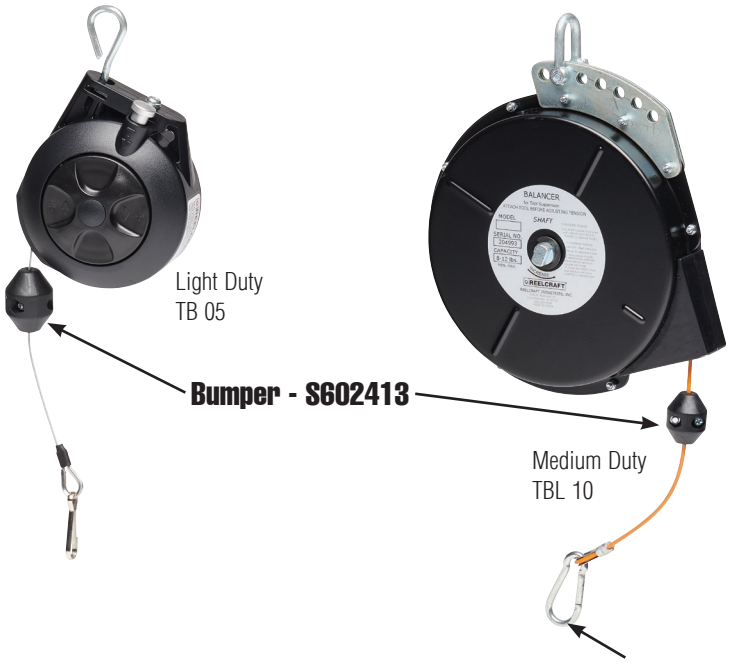

Safety Clip - 261241

Bright zinc plated steel cable and safety latch for tool attachment and other uses. Measures 2.375" (60 mm) long. Included with each model.

TB 1-5 Dimensions

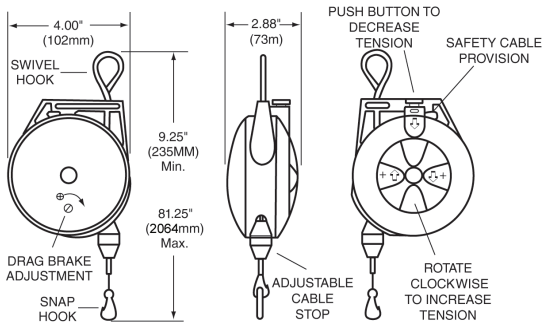

TB 10-23 Dimensions

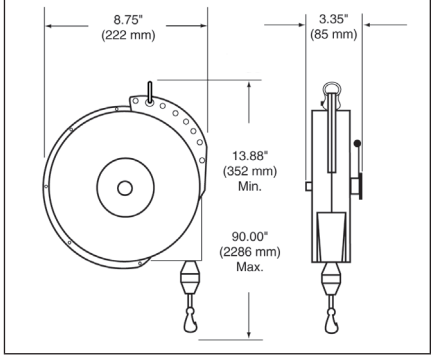

Model	Min - Max Load		Cable Length*		Shipping Weight	
	lbs	kg	ft	m	lbs	kg
TB 01	0.0 - 1.5	0.0 - 0.7	6	1.8	1.0	0.5
TB 03	1.5 - 3.0	0.7 - 1.4	6	1.8	1.0	0.5
TB 05	3.0 - 5.0	1.4 - 2.3	6	1.8	1.5	1

*Cable lengths listed are "active" or "working" cable. Safety tool clip and cable stop included. Maximum temperature 150 °F (65 °C).

Model	Min - Max Load		Cable Length*		Shipping Weight		Ratchet Lock
	lbs	kg	ft	m	lbs	kg	
Constant Pull Reels - may be adjusted to balance through 6-18 in (152-457 mm) range							
TB 10	5.0 - 10	2.3 - 4.5	8	2.4	9	4	NO
TB 12	8.0 - 12	3.6 - 5.4	8	2.4	10	4.5	NO
TB 15	10 - 15	4.5 - 6.8	8	2.4	10	4.5	NO
TB 23	16 - 23	7.2 - 10.4	8	2.4	10	4.5	NO
Reels with Ratchet Lock - retract tool upward when manually released							
TBL 10	5.0 - 10	2.3 - 4.5	8	2.4	9	4	YES
TBL 15	10 - 15	4.5 - 6.8	8	2.4	10	4.5	YES
TBL 23	16 - 23	7.2 - 10.4	8	2.4	10	4.5	YES

*Cable lengths listed are "active" or "working" cable. Safety tool clip and cable stop included. Maximum temperature 150 °F (65 °C).

Tool balancers make tools nearly weightless and reduce operator fatigue!

Optional Accessories

Cables can be combined for added length

Overhang Cable	
Model No.	Length
600605-3	3.0 ft / 91.5 cm
600605-5	5.0 ft / 152.4 cm
Safety Cable/Chain	
600603*	1.0 ft / 30.5 cm
600604**	1.0 ft / 30.5 cm

*Nylon covered steel cable (1 to 6 lbs models)
**Steel link chain (10 to 23 lbs models)

Nylon covered steel cable with safety clip. Brings tools closer to work area without unwinding cable from reel or mounting reel at lower height.

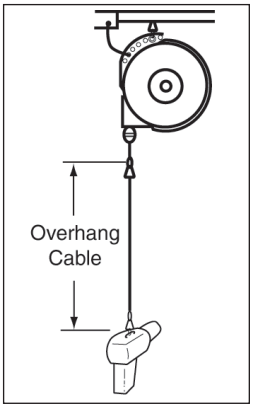
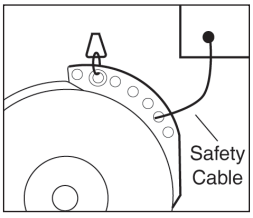
Strongly recommended, secondary steel cable or steel link chain. Prevents balancer from accidental fall. Balancers have extra holes for cable or chain.